

BRIEF INFORMATION

S77, S90 and S92 Disc Horn

→ New range of classic disc horn from dia. 77 mm up to 92 mm
→ Primarily focused and forward sound emission
→ Good penetration over a great distance in noise traffic

PRODUCT FEATURES

Application
Horns are a mandatory part of the safety equipment of a vehicle. A particularly perceptible sound is necessary in order to be able to warn other road users optimally in dangerous situations. Our signal horns offer you a high level of functional reliability.

Design and function
→ The driver presses the “horn” on the steering wheel.
→ The signal is sent via a relay, thus activating the electromagnet.
→ The diaphragm of the horn is now attracted by the magnet, separating the Minus Pole from the battery so that the magnet loses its power – consequently, the diaphragm returns back to its rest position. However, this will reconnect the Minus pole, so this process will be repeated as long as the horn is pressed.
→ When the horn is pressed, the vibrations are very fast and so produce the loud sound.

TECHNICAL DETAILS

Technical data			
Short Code	S77	S90	S92
Diameter	77 mm	90 mm	92 mm
Rated voltage	12 V		
Frequency range	360 Hz (low tone) 430 Hz (high tone)	350 Hz (low tone) 415 Hz (high tone)	335 Hz (low tone) 435 Hz (high tone)
Sound pressure level @ 2 m	110 ± 3 dB(A)	111 ± 3 dB(A)	113 ± 3 dB(A)
Power consumption	48 W per horn	42 W per horn	60 W per horn
Current Consumption	Max. 4 A	Max. 3.5 A	Max. 5 A
Operating temperature	-40 °C to +75 °C		
Protection class	IP 65		
Service life	80,000 cycles (ECE-R28)	100,000 cycles (ECE-R28)	
Housing material	Metal		
Type approval	ECE-R28		

Dimensional sketches

S77 Disc Horn

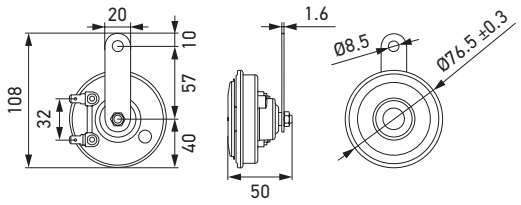

S90 Disc Horn

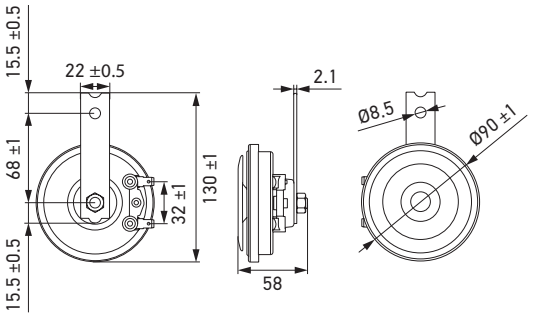

S92 Disc Horn

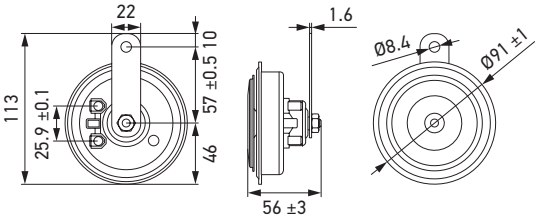

PROGRAM OVERVIEW

Product picture	Description	Part number	Packaging unit
S77 disc horn			
	12 V, 430 Hz	**3AL 012 588-351**	1 piece
	12 V, 360 / 430 Hz	**3AM 012 588-151**	1 set
S90 disc horn			
	12 V, 350 Hz	**3AL 922 000-951**	1 piece
	12 V, 350 / 415 Hz	**3AM 922 000-971**	1 set
S92 disc horn			
	12 V, 335 / 435 Hz	**3AM 011 225-871**	1 set

© HELLA GmbH & Co. KGaA, Lippstadt J01941/02.23 Subject to technical and price modifications.